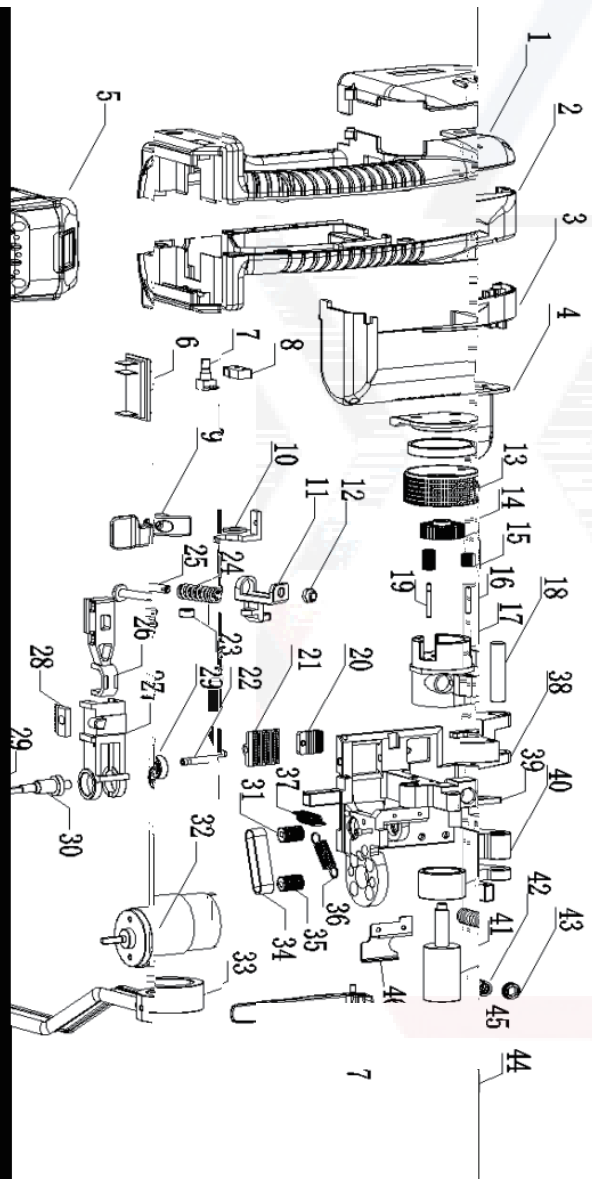

No.	Part name	Material Code	Qty.	No.	Part name	Material Code	Qty.